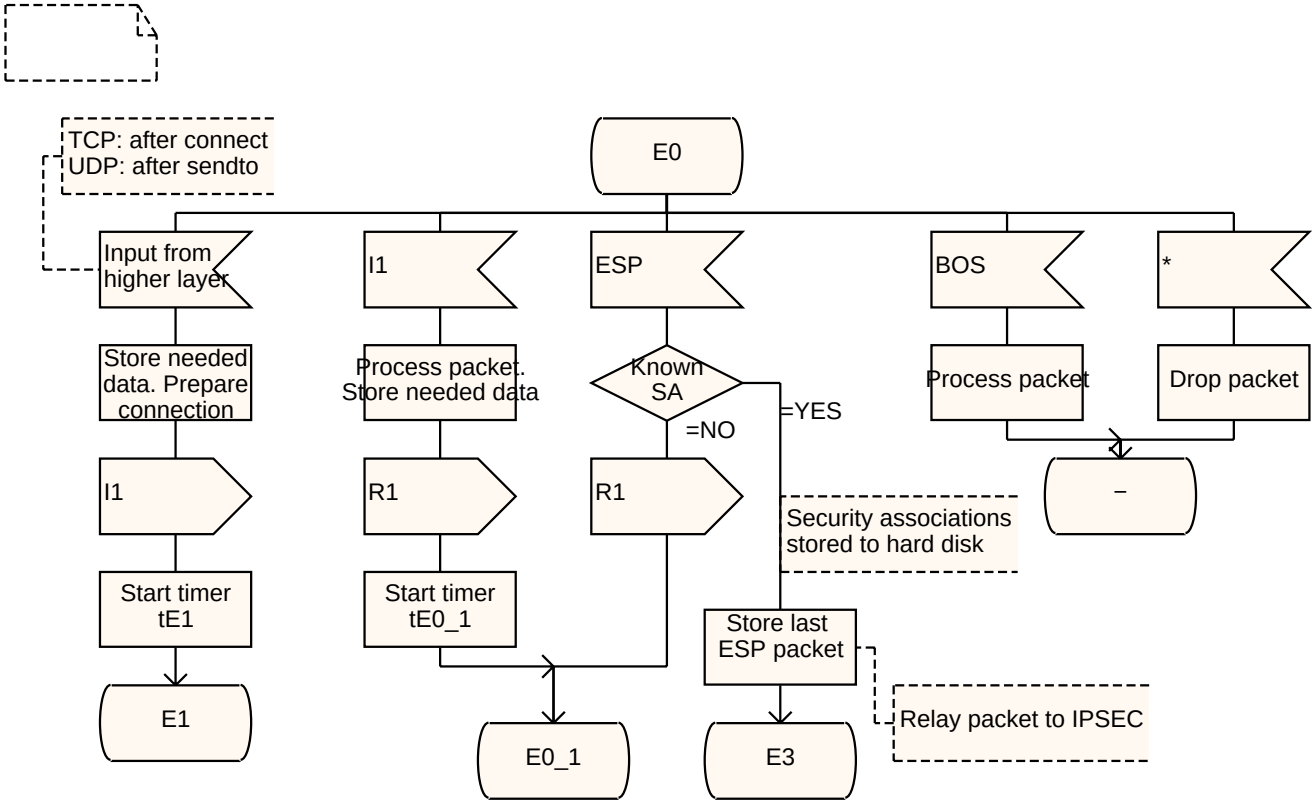
TCP: after connect
UDP: after sendto
E0
Input from higher layer
I1
ESP
BOS
*
Store needed data. Prepare connection
Process packet. Store needed data
Known SA
=YES
=NO
Process packet
Drop packet
I1
R1
R1
–
Security associations stored to hard disk
Start timer tE1
Start timer tE0_1
Store last ESP packet
Relay packet to IPSEC
E1
E0_1
E3

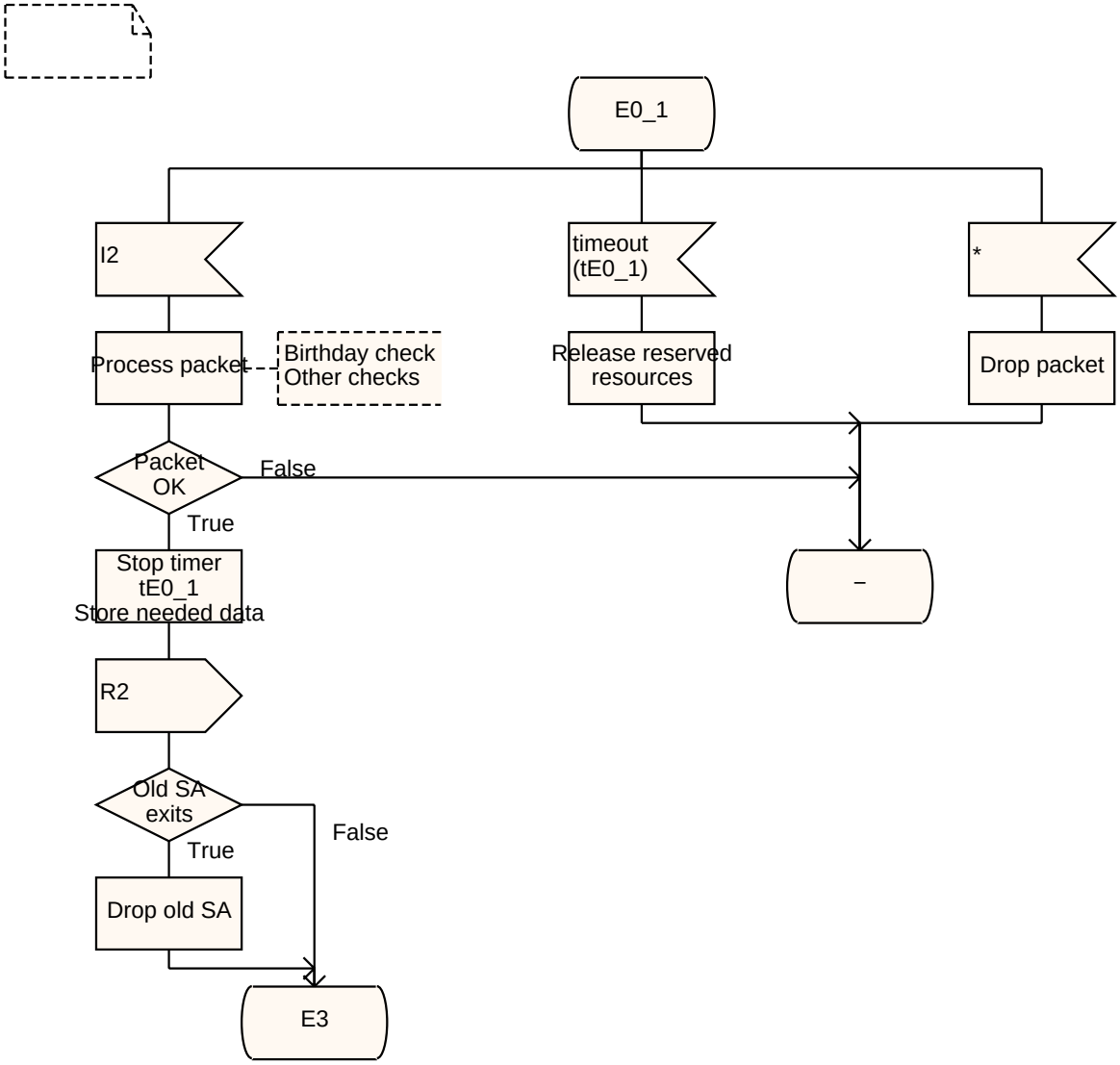
E0_1
I2
timeout
(tE0_1)
*
Process packet
Birthday check
Other checks
Release reserved
resources
Drop packet
Packet
OK
False
True
Stop timer
tE0_1
Store needed data
–
R2
Old SA
exits
False
True
Drop old SA
E3

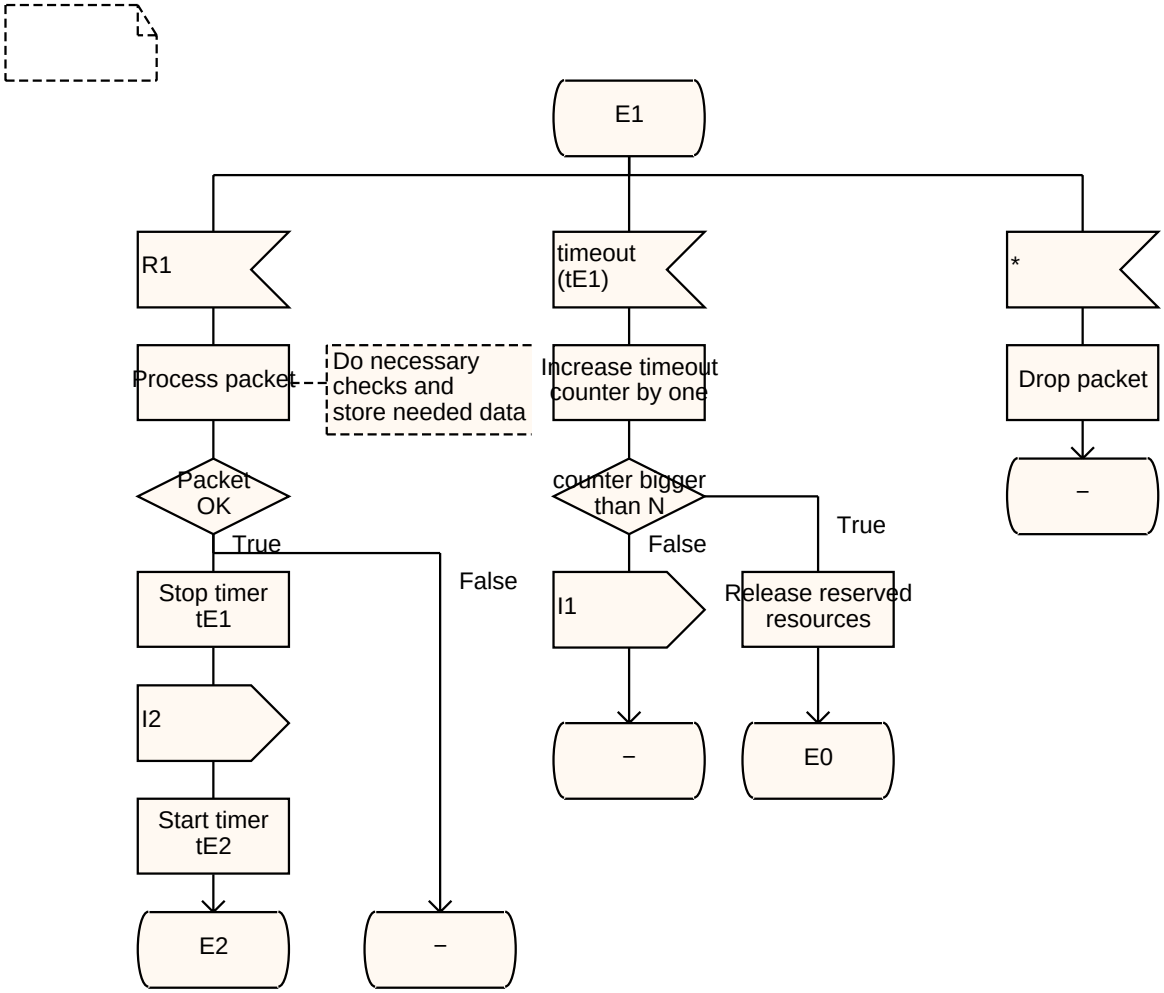
E1
R1
timeout
(tE1)
*
Process packet
Do necessary
checks and
store needed data
Increase timeout
counter by one
Drop packet
Packet
OK
counter bigger
than N
True
False
True
False
Stop timer
tE1
I1
Release reserved
resources
I2
–
E0
Start timer
tE2
E2
–
–

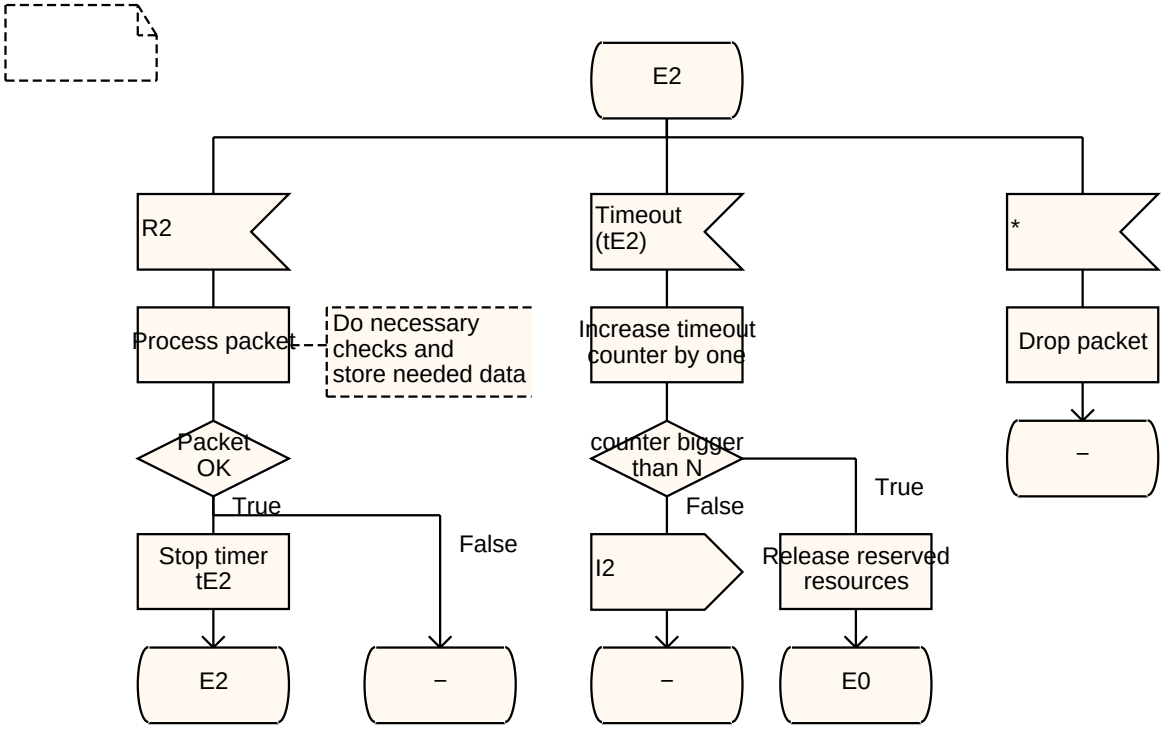
E2
R2
Timeout (tE2)
*
Process packet
Do necessary checks and store needed data
Increase timeout counter by one
Drop packet
Packet OK
counter bigger than N
True
False
True
False
Stop timer tE2
I2
Release reserved resources
E2
–
–
E0
–

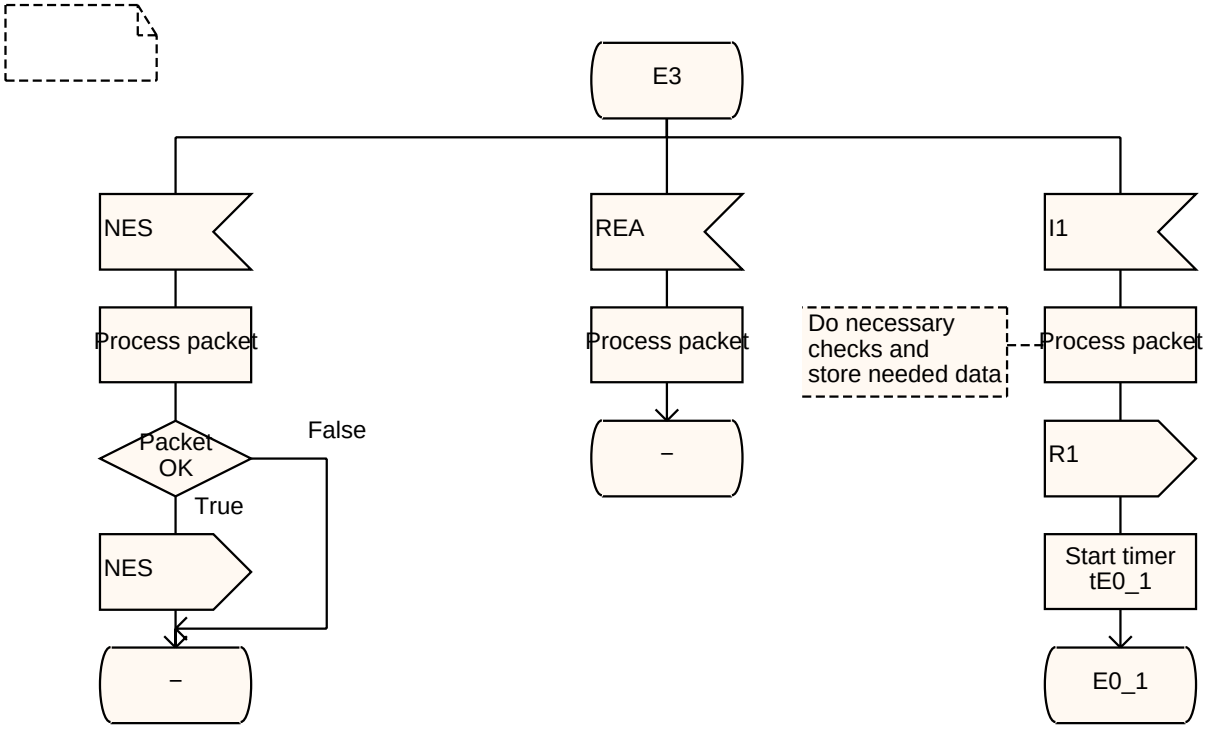
E3
NES
REA
I1
Process packet
Process packet
Do necessary checks and store needed data
Process packet
Packet OK
False
True
–
R1
NES
Start timer tE0_1
–
E0_1

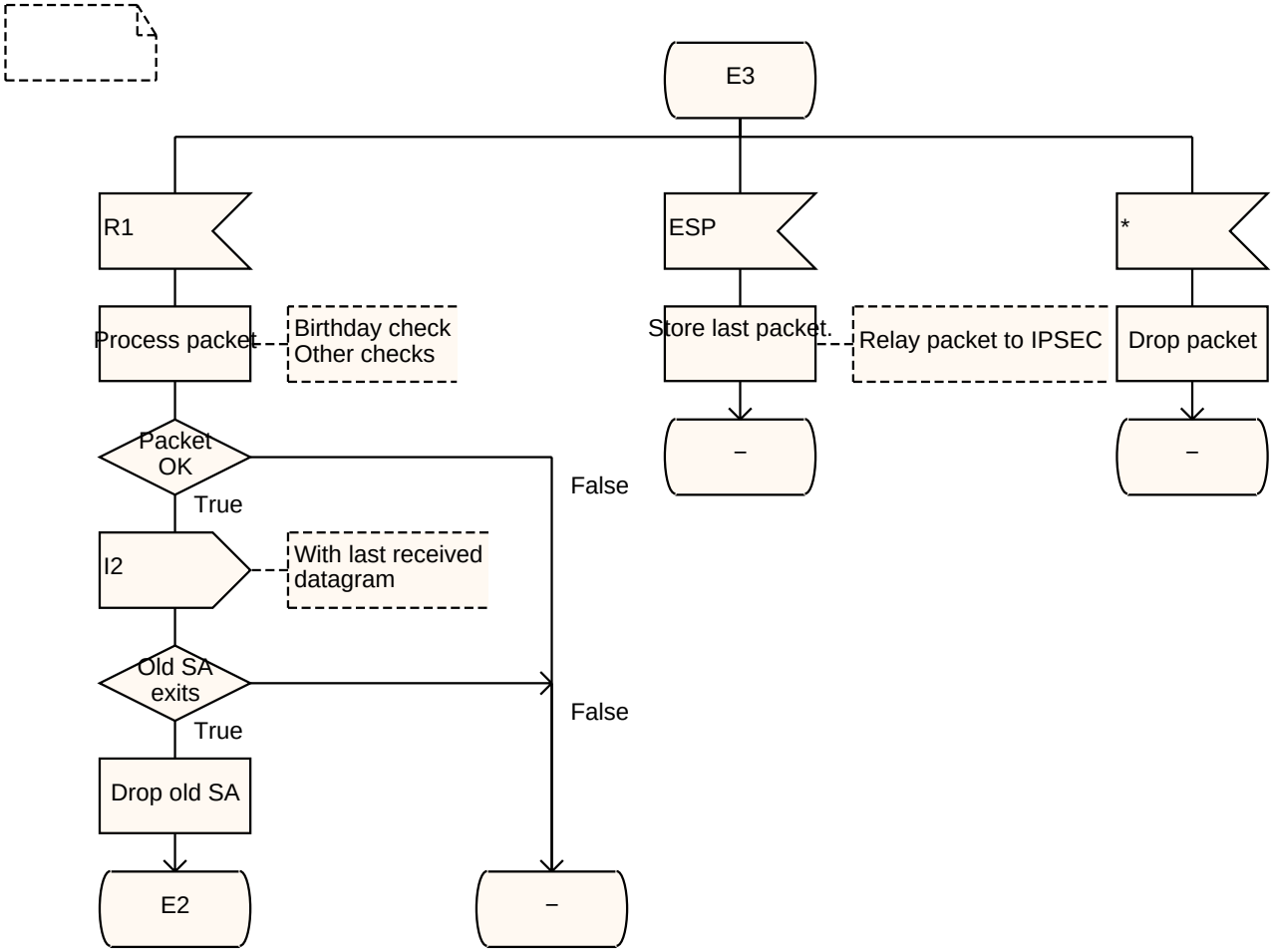
E3
R1
ESP
*
Process packet
Birthday check
Other checks
Store last packet.
Relay packet to IPSEC
Drop packet
–
–
Packet OK
False
True
I2
With last received datagram
Old SA exits
False
True
Drop old SA
E2
–